FastCraft®

IMPACT DRILL

Model 57310

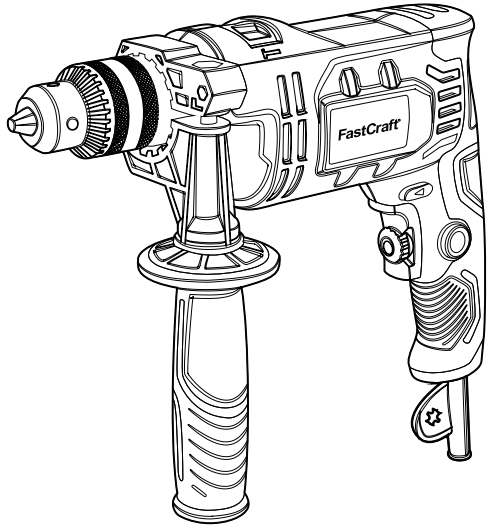

Owner's Manual

IMPORTANT: Read this manual before using this product. Failure to do so can result in serious injury. **SAVE THIS MANUAL.**

General Power Tool Safety Warnings

⚠ WARNING : Read all safety warnings and instructions. Failure to follow the warnings and instructions may result in electric shock, fire and/or serious injury.

Save all warnings and instructions for future reference.

The term ″ power tool ″ in the warnings refers to your mains-operated (corded) power tools or battery-operated (cordless) power tools.

1.Work Area Safety

a.Keep work area clean and well lit. Cluttered or dark areas invite accidents.

b.Do not operate power tools in explosive atmospheres, such as in the presence of flammable liquids, gases or dust. Power tools create sparks which may ignite the dust or fumes.

c.Keep children and bystanders away while operating a power tool. Distractions can cause you to lose control.

2.Electrical Safety

a.Power tool plugs must match the outlet. Never modify the plug in any way. Do not use any adapter plugs with grounded power tools. Unmodified plugs and match- ing outlets will reduce risk of electric shock.

b.Avoid body contact with grounded surfaces such as pipes, radia- tors, ranges and refrigerators. There is an increased risk of electric shock if your body is grounded.

c.Do not expose power tools to rain or wet conditions. Water entering a power tool will increase the risk of electric shock.

d.Do not abuse the cord. Never use the cord for carrying, pulling or unplugging the power tool. Keep cord away from heat, oil, sharp edges or moving parts. Damaged or entangled cords increase the risk of electric shock.

e.When operating a power tool outdoors, use an extension cord suit- able for outdoor use. Use of a cord suitable for outdoor use reduces the risk of electric shock.

f.If operating a power tool in a damp location is unavoidable, use a residual current device (RCD) protected supply. Use of a RCD reduces the risk of electric shock.

⚠ NOTE :The term residual current device (RCD) may be replaced by the term ground fault circuit interrupter (GFCI) or earth leakage circuit breaker (ELCB)

3.Personal Safety

a.Stay alert, watch what you are doing and use common sense when operating a power tool. Do not use a power tool while you are tired or under the influence of drugs, alcohol or medication. A moment of inattention while operating power tools may result in serious personal injury.

b.Use personal protective equipment. Always wear eye protection. Protective equipment such as dust mask, non-skid safety shoes, hard hat, or hearing protection used for appropriate conditions will reduce personal injuries.

c.Prevent unintentional starting. Ensure the switch is in the off-position before connecting to power source and/or battery pack, picking up or carrying the tool. Carrying power tools with your finger on the switch or energising power tools that have the switch on invites accidents.

d.Remove any adjusting key or wrench before turning the power tool on. A wrench or a key left attached to a rotating part of the power tool may result in personal injury.

e.Do not overreach. Keep proper footing and balance at all times. This enables better control of the power tool in unexpected situations.

f.Dress properly. Do not wear loose clothing or jewellery. Keep your hair, clothing and gloves away from moving parts. Loose clothes, jewellery or long hair can be caught in moving parts.

g.If devices are provided for the connection of dust extraction and collection facilities, ensure these are connected and properly used. Use of dust collection can reduce dust-related hazards.

4.Power Tool Use and Care

a.Do not force the power tool. Use the correct power tool for your application. The correct power tool will do the job better and safer at the rate for which it was designed.

b.Do not use the power tool if the switch does not turn it on and off. Any power tool that cannot be controlled with the switch is dangerous and must be repaired.

c.Disconnect the plug from the power source and/or the battery pack from the power tool before making any adjustments, changing accessories, or storing power tools. Such preventive safety measures reduce the risk of starting the

power tool accidentally.
d.Store idle power tools out of the reach of children and do not allow persons unfamiliar with the power tool or these instructions to operate the power tool. Power tools are dangerous in the hands of untrained users.
e.Maintain power tools. Check for misalignment or binding of moving parts, breakage of parts and any other condition that may affect the power tools operation. If damaged, have the power tool repaired before use. Many accidents are caused by poorly maintained power tools.
f.Keep cutting tools sharp and clean. Properly maintained cutting tools with sharp cutting edges are less likely to bind and are easier to control.
g.Use the power tool, accessories and tool bits etc. in accordance with these instructions, taking into account the working conditions and the work to be performed. Use of the power tool for operations different from those intended could result in a hazardous situation.

Service
Have your power tool serviced by a qualified repair person using only identical replacement parts. This will ensure that the safety of the power tool is maintained.

5.Specific Safety Rules
a.Wear ear protectors with impact drills. Exposure to noise can cause hearing loss.
b.Use auxiliary handles supplied with the tool. Loss of control can cause personal injury.
c.Hold power tool by insulated gripping surfaces, when performing an operation where the cutting accessory may contact hidden wiring or its own cord. Cutting accessory contacting a “live” wire may make exposed metal parts of the power tool “live” and could give the operator an electric shock.
d.If possible, always use clamps or a vice to hold your work.
e.Always switch off before you put the drill down.
f.Ensure that the lighting is adequate.
g.Do not put pressure on the drill, such that it slows the motor down. Allow the drill bit to drill without pressure. You will get better results and you will be taking better care of your tool.
h.Do not let anyone under 18 years operate this tool.
i.Do not touch the bit after operation. It will be very hot.

j.Keep your hands away from under the workpiece.
k.Never use your hands to remove dust, chips or waste close by the bit.
l.Rags, cloths, cord, string and the like should never be left around the work area.
m.If you are interrupted when operating the drill, complete the process and switch off before looking up.
n.When using the drill, use safety equipment including safety glasses or shield, hearing protection, and protective clothing including safety gloves. Wear a dust mask if the drilling operation creates dust.
o.The tool must be used only for its prescribed purpose. Any use other than those mentioned in this manual will be considered a case of misuse. The user and not the manufacturer shall be liable for any damage or injury resulting from such cases of misuse.

WARNING: Some dust created by power cutting contains chemicals known to cause cancer, birth defects or other reproductive harm. Some examples of these chemicals are:

1）lead from lead-based paints
2）Arsenics and chromium from chemically reacted lumber.

Your risk from these exposures varies, depending on how often you do this type of work. To reduce your exposure to these

chemicals: work in a well ventilated area, and work with approved safety equipment.

7.SYMBOLS

a.Some of the following symbols may appear on this product. Study these symbols and learn their meanings. Proper interpretation of these sym- bols will allow for more efficient and safer operation of this product.

SYMBOL	DESCRIPTION
	Class II construction Double Insulated construction
	Read the manual before set-up and/or use.
	Wear safety glasses, ear protection and respiratory protection.
	Use dust mask. Dust which is injurious to health can be generated when working on wood and other materials. Never use the device to work on any materials containing asbestos.
	Do not dispose with house-hold waste.

b.Technical Specifications

Voltage & Frequency:	120V~ 60Hz
Input Power:	5A
No Load Speed:	0-2800 min^{-1}
Max.:	∅ 13mm

c.Function Description

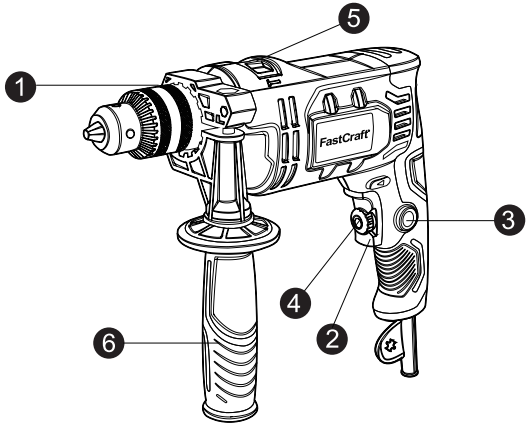

1.Chuck
2.Trigger switch
3.Lock on button
4.Variable speed dial
5.Hammer action selector
6.Auxiliary handle

8.Operation

a .Power Supply

Power tool plugs must match the outlet. Do not use any adapter plugs with earthed power tools, Check the power supply, operation power should be a little less than rated power says on the name plate.

b.Auxiliary Handle And Depth Gauge

⚠ WARNING : Always ensure that the drill is switched off and plug is removed from the power point before making any adjustments.

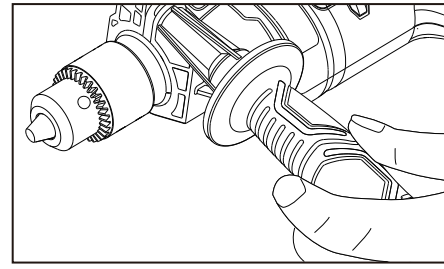

1)Turn the handle grip anti-clockwise to loosen the collar and slip it over the chuck onto the tool.

2)Adjust the position of the handle to suit the application. The auxiliary handle can be swiveled 360°.

c. The depth gauge helps keep an accurate depth when drilling holes to a set depth. Add the depth gauge and tighten the handle to secure them in place.

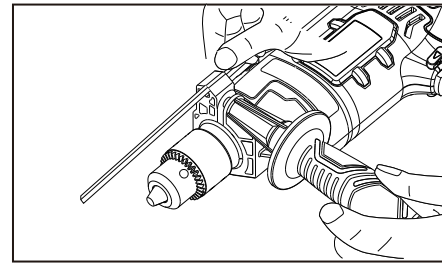

9.Trigger Switch

WARNING: To reduce the risk of injury, to make sure you can control the switch freely and keep it off before plugging drill.

1)Discontinuously operation:

ON: Depress the trigger switch

OFF: Release the trigger switch

2)Continuously operation:
ON: Depress the trigger switch and the lock on button
OFF: Release the trigger switch
) to the end of a vacuum hose.

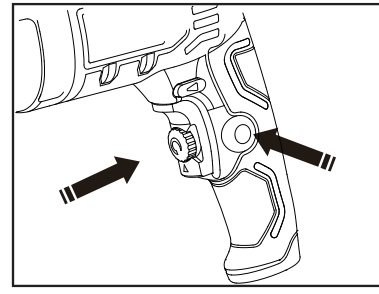

3)To adjust the drilling speed:
This tool has a variable speed switch that delivers higher speed and torque with increased trigger pressure. Speed is controlled by the amount of switch trigger depression.
Variable speed dial is used to adjust the drilling speed, turn the dial to the "+" direction to increase the speed and to the "-" direction to decrease the speed.

NOTE: Must turn off the drill when adjust the drilling speed by the variable speed dial.

10.Forward/Reverse Control

With the hammer drill placed toward the operator

1)To select forward rotation, push the forward/ reverse control to right side.
2)To select reverse rotation, push the forward/ reverse control to left side.
3)The forward/reverse control cannot be pushed left or right when the trigger switch is depressed.

WARNING: When changing the position of the control, be sure the trigger is released and the motor is stationary.

NOTE: The first time the tool is run after changing the direction of rotation, you may hear a click on start up. This is normal and does not indicate a problem.

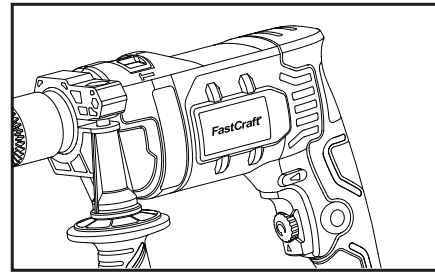

11.Hammer Action Selector

●To select hammer action for drilling in masonry, set the hammer action selector fully to the right marked with symbol "".
●To select drill mode for drilling in wood and metal, set the hammer action selector fully to the left marked with symbol "".

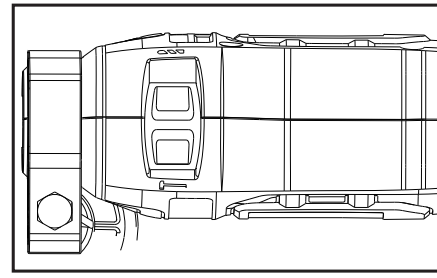

12.Applications

⚠ WARNING : To reduce the risk of explosion and electric shock, check the work area if there is hidden "live" wire, gas or the water tube.

NOTE:
1)Before drilling, be sure the workpiece is clamped securely.
2)Use backing material to prevent damage to the workpiece during breakthrough.
3)When staring a hole, make a mark on the work surface, then drill a small hole.
4)Always apply pressure in line with the bit. Use enough pressure to keep the drill biting, but do not push hard enough to stall the motor.
5)Pull the bit out of the hole to prevent jamming. As well as to cool it during running.
⚠ WARNING : To reduce the risk of injury, never touch the bit to clean the debris until it has already stopped and cooled down.

a.DRILLING WOOD
1)For maximum performance when drilling larger holes, use auger bits or spade bits for wood drilling.
2)Set the tool to the drill mode.
3)Begin drilling at a very low speed to prevent the bit from slipping off the starting point. Increase the speed as it bites into the wood.

4)When drilling through holes, place a block of wood behind the work piece to prevent ragged or splintered edges on the backside of the hole.

b.DRILLING METALS

1)For maximum performance, use HSS drill bits for metal drilling.
2)Clamp the workpiece securely.
3)Set the tool to the drill mode.
4)Mark off the centre of the hole.
5)Use a suitable lubricant for the material you are working on.
Steel: Cutting oil
Aluminum: Turpentine or paraffin
Do not use any lubricant when drilling in nonferrous metals such as copper and brass
6)Begin drilling at a very low speed to prevent the bit from slipping off the starting point.

c.DRILLING MASONRY

1)For maximum performance, use high quality carbide-tipped masonry drill bits when drilling holes in brick, tile, concrete etc.
2)Use the drilling setting initially then revert to the hammer action once the hole is established.
3)Apply light pressure and medium speed for best results in brick.
4)Apply additional pressure and high speed for hard materials such as concrete.
5)When drilling holes in tile, practice on a scrap piece to determine the best speed and pressure.

NOTE: Reverse rotation during impact drilling may damage the drill and drill bit.

13.Maintenance

Never use aggressive detergents or solvents for cleaning.

a.To prevent accidents, always unplug the saw from the power source before cleaning or performing any maintenance the saw may be cleaned most effectively using compressed air.Always wear safety goggles when using compressed air. If compressed air is not available, use a brush to remove dust and chips from the saw.

b.Motor ventilation vents and switch levers must be kept clean and free of foreign matter. Do not attempt to clean by inserting pointed objects through open- ings.

c.Never use any caustic agents to clean plastic parts. Such as: gasoline, carbon tetrachloride, chlorinated cleaning solvents, ammonia and household cleaners containing ammonia. Do not use any of these to clean the saw.

d.Have an authorized service center examine and/or replace the worn carbon brushes in the event of excessive parking.

e.Blades become dull even when cutting regular lumber, a sure sign of a dull blade is the need to force the saw forward instead of guiding it while making a cut. Take the blade to a service center for sharpening.

f.Keep the machine clean all the time.

g.If you discover any damage, consult the exploded drawing and parts list to determine exactly which replacement part you need to order from our customer service department.

h.Clean the housing only with a damp cloth. Do not use any solvents! Dry thoroughly afterwards.

i.If the supply cord of this power tool is damaged, it must be replaced by a similar cord available through the service organization or a qualified authoritative technician.

⚠ ATTENTION : Do not use cleaning agents to clean the plastic parts of the tool. A mild detergent on a damp cloth is recommended. Water must never come into contact with the tool.

14.Transport

Turn the motor off and disconnect the mains plug. While transporting, be careful not to drop, or shock the machine. For transport, the machine has to be fixed against slipping and tipping over. Do not place objects on the machine.

15.Meaning of crossed –out wheeled dustbin:

Do not dispose of electrical appliances as unsorted municipal waste, use separate collection facilities. Contact your local government for information regarding the collection systems available. If electrical appliances are disposed of in landfills or dumps, hazardous substances can leak into the groundwater and get into the food chain,damaging your health and well-being

16.After sales

For questions about this or any other ***FastCraft*** Products, please email us:
FastCraft @nyclcompany.com.



FastCraft®