FastCraft®

Circular Saw

Model 76334-1

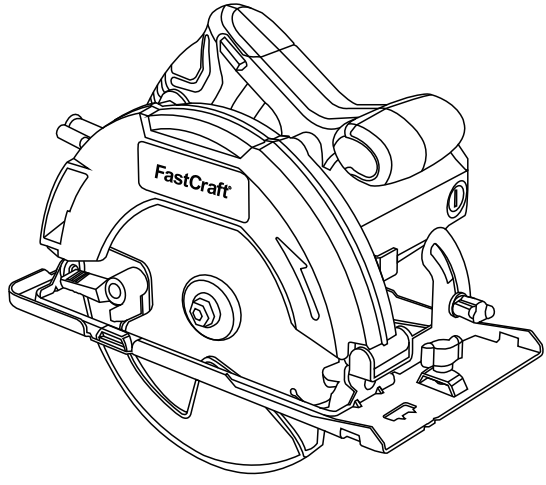

Owner's Manual

IMPORTANT: Read this manual before using this product. Failure to do so can result in serious injury. **SAVE THIS MANUAL.**

General Power Tool Safety Warnings

⚠ WARNING : Read all safety warnings and instructions. Failure to follow the warnings and instructions may result in electric shock, fire and/or serious injury.

Save all warnings and instructions for future reference.

The term ″ power tool ″ in the warnings refers to your mains-operated (corded) power tools or battery-operated (cordless) power tools.

1.Work Area Safety

a.Keep work area clean and well lit. Cluttered or dark areas invite accidents.

b.Do not operate power tools in explosive atmospheres, such as in the presence of flammable liquids, gases or dust. Power tools create sparks which may ignite the dust or fumes.

c.Keep children and bystanders away while operating a power tool. Distractions can cause you to lose control.

2.Electrical Safety

a.Power tool plugs must match the outlet. Never modify the plug in any way. Do not use any adapter plugs with grounded power tools. Unmodified plugs and match- ing outlets will reduce risk of electric shock.

b.Avoid body contact with grounded surfaces such as pipes, radia- tors, ranges and refrigerators. There is an increased risk of electric shock if your body is grounded.

c.Do not expose power tools to rain or wet conditions. Water entering a power tool will increase the risk of electric shock.

d.Do not abuse the cord. Never use the cord for carrying, pulling or unplugging the power tool. Keep cord away from heat, oil, sharp edges or moving parts. Damaged or entangled cords increase the risk of electric shock.

e.When operating a power tool outdoors, use an extension cord suit- able for outdoor use. Use of a cord suitable for outdoor use reduces the risk of electric shock.

f.If operating a power tool in a damp location is unavoidable, use a residual current device (RCD) protected supply. Use of a RCD reduces the risk of elec tric shock.

⚠ NOTE :The term residual current device (RCD) may be replaced by the term ground fault circuit interrupter (GFCI) or earth leakage circuit breaker (ELCB)

3.Personal Safety

a.Stay alert, watch what you are doing and use common sense when operating a power tool. Do not use a power tool while you are tired or under the influence of drugs, alcohol or medication. A moment of inattention while operating power tools may result in serious personal injury.

b.Use personal protective equipment. Always wear eye protection. Protective equipment such as dust mask, non-skid safety shoes, hard hat, or hearing protection used for appropriate conditions will reduce personal injuries.

c.Prevent unintentional starting. Ensure the switch is in the off-position before connecting to power source and/or battery pack, picking up or carrying the tool. Carrying power tools with your finger on the switch or energising power tools that have the switch on invites accidents.

d.Remove any adjusting key or wrench before turning the power tool on. A wrench or a key left attached to a rotating part of the power tool may result in personal injury.

e.Do not overreach. Keep proper footing and balance at all times. This enables better control of the power tool in unexpected situations.

f.Dress properly. Do not wear loose clothing or jewellery. Keep your hair, clothing and gloves away from moving parts. Loose clothes, jewellery or long hair can be caught in moving parts.

g.If devices are provided for the connection of dust extraction and collection facilities, ensure these are connected and properly used. Use of dust collection can reduce dust-related hazards.

4.Power Tool Use and Care

a.Do not force the power tool. Use the correct power tool for your application. The correct power tool will do the job better and safer at the rate for which it was designed.

b.Do not use the power tool if the switch does not turn it on and off. Any power tool that cannot be controlled with the switch is dangerous and must be repaired.

c.Disconnect the plug from the power source and/or the battery pack from the power tool before making any adjustments, changing accessories, or storing power tools. Such preventive safety measures reduce the risk of starting the

power tool accidentally.
d.Store idle power tools out of the reach of children and do not allow persons unfamiliar with the power tool or these instructions to operate the power tool. Power tools are dangerous in the hands of untrained users.
e.Maintain power tools. Check for misalignment or binding of moving parts, breakage of parts and any other condition that may affect the power tools operation. If damaged, have the power tool repaired before use. Many accidents are caused by poorly maintained power tools.
f.Keep cutting tools sharp and clean. Properly maintained cutting tools with sharp cutting edges are less likely to bind and are easier to control.
g.Use the power tool, accessories and tool bits etc. in accordance with these instructions, taking into account the working conditions and the work to be performed. Use of the power tool for operations different from those intended could result in a hazardous situation.

Service

Have your power tool serviced by a qualified repair person using only identical replacement parts. This will ensure that the safety of the power tool is maintained.

5. ADDITIONAL SAFETY RULES FOR CIRCULAR SAW

⚠ WARNING : Be sure to read and understand all instructions in this manual. Failure to follow all instructions may result in electric shock, fire and/or serious personal injury.

DANGER:
1) Keep hands away from cutting area and the blade. Keep your second hand on auxiliary handle, or motor housing. If both hands are holding the saw, they cannot be cut by the blade.
2) Do not reach underneath the workpiece. The guard cannot protect you from the blade below the workpiece.
3) Adjust the cutting depth to the thicknessof the workpiece. Less than a full tooth of the blade teeth should be visible below the workpiece.
4) Never hold piece being cut in your hands or across your leg. Secure the workpiece to a stable platform. It is important to support the work properly to minimize body exposure, lade binding, or loss of control.
5) Hold power tool by insulated gripping surfaces when performing an operation

where the cutting tool may contact hidden wiring or its own cord. Contact with a "live" wire will also make exposed metal parts of the power tool "live" and shock the operator.
6) When ripping always use a rip fence or straight edge guide. This improves the accuracy of cut and reduces the chance of blade binding.
7) Always use blades with correct size and shape (diamond versus round) of arbour holes. Blades that do not match the mounting hardware of the saw will run eccentrically, causing loss of control.
8) Never use damaged or incorrect blade washers or bolt. The blade washers and bolt ere specially designed for your saw, for optimum performance and safety of operation.

Further safety instructions for all saws causes and operator prevention of kickback:

1）Kickback is a sudden reaction to a pinched, bound or misaligned saw blade, causing an uncontrolled saw to lift up and out of the workpiece toward the operator;
2）When the blade is pinched or bound tightly by the kerf closing down, the blade stalls and the motor reaction drives the unit rapidly back toward the operator;
3）If the blade becomes twisted or misaligned in the cut, the teeth at the back edge ofthe blade can dig into the top surface of the wood causing the blade to climb out of the kerf and jump back toward the operator.

Kickback is the result of saw misuse and/or incorrect operating procedures or conditions and can be avoided by taking proper precautions as given below.

1）Maintain a firm grip with both hands on the saw and position your arms to resist kickback forces. Position your body to either side of the blade, but not in line with the blade. Kickback could cause the saw to jump backwards,but kickback forces can be controlled by the operator, if proper precautions are taken.
2）When blade is binding, or when interrupting a cut for any reason, release the trigger and hold the saw motionless in the material until the blade comes to a

complete stop. Never attempt to remove the saw from the work or pull the saw backward while the blade is in motion or kickback may occur. Investigate and take corrective actions to eliminate the cause of blade binding.
3）When restarting a saw in the workpiece, centre the saw blade in the kerf and check that saw teeth are not engaged into the material. If saw blade is binding, it may walk up or kickback from the workpiece as the saw is restarted.
4）Support large panels to minimise the risk of blade pinching and kickback. Large panels tend to sag under their own weight. Supports must be placed under the panel on both sides, near the line of cut and near the edge of the panel.
5）Do not use dull or damaged blades. Unsharpened or improperly set blades produce narrow kerf causing excessive friction, blade binding and kickback.
6）Blade depth and bevel adjusting locking levers must be tight and secure before making cut. If blade adjustment shifts while cutting, it may cause binding and kickback.
7）Use extra caution when making a "plunge cut" into existing walls or other blind areas. The protruding blade may cut objects that can cause kickback.

Safety instructions for saws with a pendulum blade guard

1）Check lower guard for proper closing before each use. Do not operate the saw if lower guard does not move freely and close instantly. Never clamp or tie the lower guard into the open position. If saw is accidentally dropped, lower guard may be bent. Raise the lower guard with the retracting handle and make sure it moves freely and does not touch the blade or any other part, in all angles and depths of cut.
2）Check the operation of the lower guard spring. If the guard and the spring are not operating properly, they must be serviced before use.
3）Lower guard may operate sluggishly due to damaged parts, gummy deposits, or a build-up of debris. Lower guard should be retracted manually only for special cuts such as" plunge cuts “and "compound cuts". Raise lower guard by retracting handle and as soon as blade enters the material, the lower guard must be released. For all other sawing, the lower guard should operate automatically.
4）Always observe that the lower guard is covering the blade before placing saw down on bench or floor. An unprotected, coasting blade will cause the saw to walk backwards, cutting whatever is in its path. Be aware of the time it takes for the

blade to stop after switch is released.

Additional safety instructions for all saws with riving knife

1）Use the appropriate riving knife for the blade being used.For the riving knife to work, it must be thicker than the body of the blade but thinner than the tooth set of the blade.
2）Adjust the riving knife as described in this instruction manual. Incorrect spacing, positioning and alignment can make the riving knife ineffective in preventing kickback.
3）Always use the riving knife except when plunge cutting. Riving knife must be replaced after plunge cutting.Riving knife causes interference during plunge cutting and can create kickback.
4）For the riving knife to work, it must be engaged in the workpiece. The riving knife is ineffective in preventing kickback during short cuts.
5）Do not operate the saw if riving knife is bent. Even a light interference can slow the closing rate of a guard.

Additional safety instructions for circular saws

1）Wear ear protectors. Exposure to noise can cause hearing loss.
2）Preferably wear a dust mask.
3）Do not use blades of larger or smaller diameter than recommended. For the proper blade rating refer to the technical data. Use only the blades specified in this manual, complying with GB.
4）Do not use distorted or cracked saw blades.
5）Do not use a blade made of high-speed steel.
6）Do not use a blade not in conformity with features as described in this manual.
7）Do not exert lateral force to stop the blade.
8）Do not set the movable guard in the open position.
9）Ensure freely moving guard without binding.
10）Ensure proper movement of retracting mechanism of all the protection system.

11）Prior to blade replacement, adjustment or other maintenance, always unplug the tool.
12）Never use any abrasive wheel unless a tool is specially designed for abrasive wheels.
13）Do not use a blade with thinner blade body than the riving knife and tooth set.
14）The riving knife must be adjusted not more than 5 mm from the blade tooth circle, and the tooth length below the lower edge of the riving knife shall not be bigger than 5 mm.
15）Always use the riving knife except when plunge cutting.
16）Never use abrasive cut-off wheels.

WARNING: Some dust created by power Cutting contains chemicals known to cause cancer, birth defects or other reproductive harm. Some examples of these chemicals are:
1）lead from lead-based paints
2）Arsenics and chromium from chemically reacted lumber.

Your risk from these exposures varies, depending on how often you do this type of work. To reduce your exposure to these

chemicals: work in a well ventilated area, and work with approved safety equipment.

6.SYMBOLS

a.Some of the following symbols may appear on this product. Study these symbols and learn their meanings. Proper interpretation of these sym- bols will allow for more efficient and safer operation of this product.

SYMBOL	DESCRIPTION
	Class II construction Double Insulated construction
	Read the manual before set-up and/or use.
	Wear safety glasses, ear protection and respiratory protection.

	Use dust mask. Dust which is injurious to health can be generated when working on wood and other materials. Never use the device to work on any materials containing asbestos.
	Do not dispose with house-hold waste.

b.TECHNICAL SPECIFICATIONS

Voltage & Frequency:	120V~ 60Hz
Input Power:	13A
No Load Speed:	5800 min^{-1}
Blade Size:	∅ 7-1/4"
Max. cutting depth:	2-1/2" @90degree 1-7/8" @45degree

c.FUNCTION DESCRIPTION

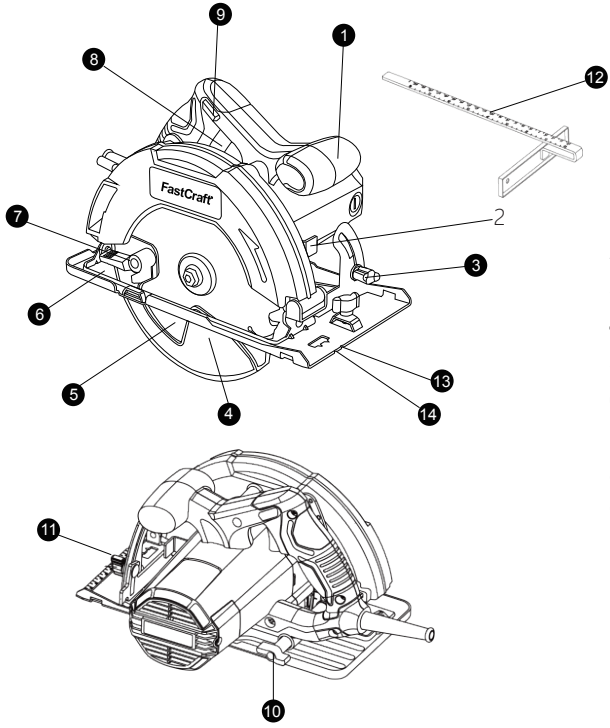

1.Front handle
2.Spindle lock
3.Bevel adiustment knob
4.Lower guard
5.Saw blade
6.Base plate
7.Lower guard retracting lever
8.On/off switch
9.Safety button
10.Depth adjustment knob
11.Ripfence lock knob
12.Parallel fence
13.Cutting mark 45°

7.OPERATION

Prior to assembly and adjustment always unplug the tool.

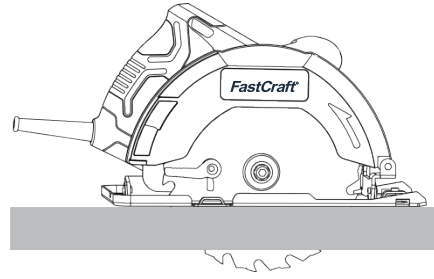

1、Depth of cut adjustment

1）Loosen the depth adjustment knob (11).

2）Move the base plate (6) to obtain the correct depth of cut.

3）Tighten the depth adjustment knob (11).For optimal results, allow the saw blade to protrude from the workpiece by about 3 mm.

2、Bevel adjustment

The bevel angle can be adjusted between 0°and 45°.

1）Loosen the bevel adjustment knob (3).

2）Set the bevel angle by tilting the base plate(6) until the mark indicates the desired angle on the scale.

3）Tighten the bevel adjustment knob (3).

3、Shoe adjustment for 90°cuts

1）Adjust the saw to 0o bevel.

2）Retract the blade guard using the lever (7) and place the saw on the blade side.

3）Loosen the bevel adjustment knob (3).

4）Place a square against the blade and shoe to adjust the 90°setting.

3、Replacing the saw blade

Be careful to turn off the switch and unplug the power plug before installing or disassembling the wheel disc.

To disassemble the blade (5), press the shaft lock rod forcefully first so that the blade cannot rotate.using the spanner （18）Counterclockwise loosening of hexagonal bolts (14), Remove hexagonal bolts (17), washers （16&15）and blade （5）.

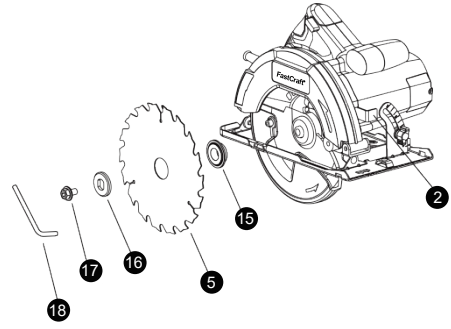

Install the blade (5) according to the reverse procedure of dismantling the wheel blade. When installing the blade, make sure that the direction indicated by the arrow on the blade surface is the same as the direction indicated by the arrow on the wheel cover. The hexagonal bolt (17) must be tightened firmly

4、Mounting and adjusting the parallel fence
The parallel fence (12) is used for cutting parallel to the edge of the workpiece.

Mounting
1）Slacken the locking screw (3) as to allow the parallel fence to pass.
2）Insert the parallel fence (12) in the base plate(6) as shown.
3）Tighten the locking screw (3).

Adjusting
1）Slacken the locking screw (3) and set the parallel fence (12) to the desired width.
2）Tighten the locking screw (3).

8.Maintenance

Never use aggressive detergents or solvents for cleaning.

a.To prevent accidents, always unplug the saw from the power source before cleaning or performing any maintenance the saw may be cleaned most effectively using compressed air.Always wear safety goggles when using compressed air. If compressed air is not available, use a brush to remove dust and chips from the saw.
b.Motor ventilation vents and switch levers must be kept clean and free of foreign matter. Do not attempt to clean by inserting pointed objects through open- ings.
c.Never use any caustic agents to clean plastic parts. Such as: gasoline, carbon tetrachloride, chlorinated cleaning solvents, ammonia and household cleaners containing ammonia. Do not use any of these to clean the saw.
d.Have an authorized service center examine and/or replace the worn carbon brushes in the event of excessive parking.
e.Blades become dull even when cutting regular lumber, a sure sign of a dull blade is the need to force the saw forward instead of guiding it while making a cut. Take the blade to a service center for sharpening.

f.Keep the machine clean all the time.
g.If you discover any damage, consult the exploded drawing and parts list to determine exactly which replacement part you need to order from our customer service department.
h.Clean the housing only with a damp cloth. Do not use any solvents! Dry thoroughly afterwards.
i.If the supply cord of this power tool is damaged, it must be replaced by a similar cord available through the service organization or a qualified authoritative technician.

⚠ CAUTION : Do not use cleaning agents to clean the plastic parts of the tool. A mild detergent on a damp cloth is recommended. Water must never come into contact with the tool.

9.Transport
Turn the motor off and disconnect the mains plug. While transporting, be careful not to drop, or shock the machine. For transport, the machine has to be fixed against slipping and tipping over. Do not place objects on the machine.

10.Meaning of crossed –out wheeled dustbin:
Do not dispose of electrical appliances as unsorted municipal waste, use separate collection facilities. Contact your local government for information regarding the collection systems available. If electrical appliances are disposed of in landfills or dumps, hazardous substances can leak into the groundwater and get into the food chain,damaging your health and well-being

11.After sales
For questions about this or any other ***FastCraft*** Products, please email us:
FastCraft @nyclcompany.com.



FastCraft®