## SERVICE AND REPAIR

Service Information
We build quality and durability into the design of our products; but no amount of careful design by us, and careful maintenance by you, can guarantee a repair-free life for your auger. Most repairs will be minor, and easily fixed by following the suggestions in the troubleshooting guide in this section.

The guide will help you pinpoint the causes of common problems and identify remedies.

For more complicated repairs, contact customer service.
We will always be glad to answer any questions you have, or help you find suitable assistance. To order parts or inquire about warranty, call or write us at the address found below.

## TROUBLESHOOTING

| PROBLEM | POSSIBLE CAUSE | REMEDY/ACTION |
|---|---|---|
| Powerhead starts, then stops | 1. Battery low on power<br>2. Battery may be slightly under temperature | 1. Charge battery<br>2. Remove the battery from the unit and place it in a warm location(inside a jacket pocket, vehicle or a battery bag) |
| Auger jumps on ice | 1. Blades damaged or sharpened incorrectly<br>2. Ice point damaged or sharpened incorrectly | 1. Replace with new blades<br>2. Replace with new ice point |
| Auger cuts slowly | 1. Dull blades<br>2. Dull ice point | 1. Replace with new blades<br>2. Replace with new ice point |

**Email customer service at warranty@nycl.us if above remedies fail.**
**Please visit our website: WWW.FASTCRAFT.US for additional parts or accessories.**



FastCraft®

# 40V Cordless Electric Ice Auger

## *Model 0010-1-A*

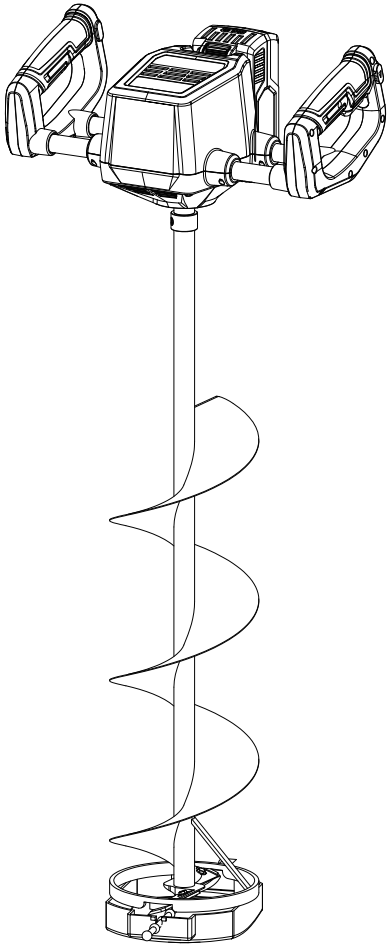

Operator's Manual & Original Operating Instructions

**Please read the enclosed safety and operating instructions before you use the electric ice auger the first time in order to ensure safe and proper handling. Please take the time to read this manual carefully to learn how to correctly operate and maintain your ice auger.**

Save these instructions for future reference.

## WARNINGS AND SAFETY PRECAUTIONS

**Operator's Responsibility**

***NOTE: If you are planning to use the battery multiple times in a single outing, it is ideal to remove the battery and place in a warm location. This is CRITICALLY important in extremely cold weather conditions.***

**Accurate, safe and effective use of this product is the operator's responsibility.**

- Read and follow all safety instructions.
- Maintain this machine according to directions and schedule included in this operator's manual.
- Ensure that anyone who uses the machine is familiar with and understand all controls and safety precautions.
- Do not discard battery into trash can. Discard the battery according to your local, state or federal or country's regulations.

### Safety Messages

Your manual contains special messages to bring attention to potential safety concerns, as well as helpful operating and servicing information. Please read all the information carefully to avoid injury and machine damage.

NOTE: General information is given throughout the manual that may help the operator in the operation or service of the product.

**THIS SYMBOL POINTS OUT IMPORTANT SAFETY INSTRUCTIONS WHICH IF NOT FOLLOWED COULD ENDANGER YOUR PERSONAL SAFETY.**

### Before Operating Unit:

*Please read this section carefully.* Read entire operating and maintenance instructions. Failure to follow instructions could result in injury or death. Operate the machine according to the safety instructions outlined here an inserted throughout the text. Anyone who uses this machine must read the instructions and be familiar with the controls.

## WARNING

**WARNING INDICATES A HAZARD WHICH, IF NOT AVOIDED, COULD RESULT IN DEATH OR SERIOUS INJURY AND/ OR PROPERTY DAMAGE.**



***NOTE: Recharging the battery after each use is best for the life of the battery.***

1. Place the battery back onto the powerhead when ready to use.

***NOTE: Battery should be off of the powerhead when not in use.***

## MAINTENANCE AND STORAGE

Read the maintenance schedule and observe these recommendations to extend the life of your electric auger.

Good maintenance is essential for safe, economical, and trouble-free operation. To help you properly care for your powerhead, the following pages include a maintenance schedule, routine inspection procedures, and simple maintenance procedures using basic hand tools. Other service tasks that are more difficult, or require special tools, are beat handled by professionals and are normally wet conditions, consult customer service for recommendations applicable to your individual needs and use.

### Maintenance and Schedule

| MAINTENANCE ITEM | | Before each day's use | Every 500 complete charges | Yearly |
|---|---|---|---|---|
| Check bolts and nuts | | X | | |
| Battery | Charge | X | | |
| | Replace | | X | |
| Sharpen/Replace Blades | | | | X |

### Transporting Your Ice Auger

- Remove the battery if transporting the auger.

Long-Term Storage

If your ice auger will not be run for more than one month, prepare it for long-term storage.

1. Charge the battery and leave it off if the unit. DO NOT leave the battery on the charger. Store the battery in temperature between 40°F-120°F.
2. Remove the auger from the powerhead and apply a thin layer of grease to the driveshaft.
3. Remove all debris from auger and powerhead.
4. Attach the blade protector to bottom of auger.
5. Keep in a dry, moisture-free area.

## IMPORTANT

**CONNECT THE BATTERY TO THE CHARGER EVERY THREE MONTHS TO ENSURE THAT MAINTAINS A FULL CHARGE DURING EXTENDED STORAGE.**

***Note: If you are planning to use the battery multiple times in a single outing, it is ideal to remove the battery and place in a warm location. This is especially important in cold weather conditions.***

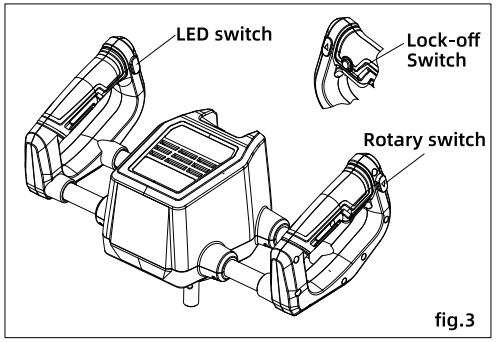

fig.3

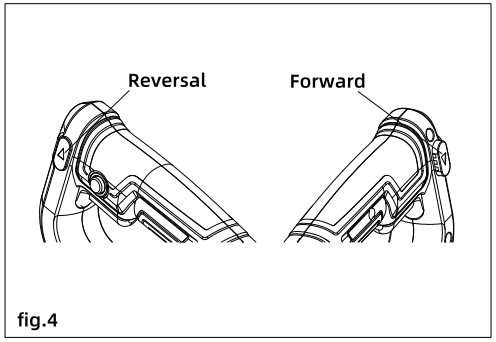

fig.4

### Reverse Switch Operation

To use reverse operation function to flush hole of unwanted debris do as follows: **(Fig.4)**

1. To activate reverse function, depress the reverse switch and then operate the Lock-off Switch.
2. To activate forward function, depress the Forward button and then operate the Lock-off Switch.

To Flush a hole, do as follows:

1. Place the auger half way down the hole with the auger starting in the hole. The top of the auger flight must be above the water and slush.
2. Activate reverse function and continue to lower the auger into the hole. The lower ring of the auger must exit the bottom of the hole.
3. After a few seconds of reverse operation, release the operating trigger.

***NOTE: KEEP POWERHEAD CLEAR OF WATER. Water will come back up the hole and overflow.***

4. Repeat the above steps three times to clear the hole.

### Battery Charging and Monitoring

1. Remove the battery by sliding it off of the powerhead.
2. Plug the battery into a 100-240AC outlet.
3. Slide the battery into the charger.
4. The charger red indicator light should be lighted.
5. When indicator light is lit solid green, the battery is fully charged.
6. Once the battery has been fully charged, unplug the charger from the wall.
7. Remove the battery from the charger.



## ⚠ CAUTION

**CAUTION INDICATED YOU CAN BE HURT OR YOUR EQUIPMENT DAMAGE IF THE SAFETY INSTRUCTIONS THAT FOLLOW THIS SIGNAL WORD ARE NOT OBEYED.**

## ⚠ IMPORTANT

**INDICATES HELPFUL INFORMATION FOR PROPER ASSEMBLY, OPERATION, OR MAINTENANCE OF YOUR EQUIPMENT.**

## ⚠ WARNING

**READ AND COMPLY WITH ENTIRE OPERATING AND MAINTENANCE INSTRUCTIONS FOR THIS MACHINE, IN ADDITION TO ALL SAFETU INSTRUCTIONS. FAILURE TO FOLLOWAND/OR COMPLY WITH THESE INSTRUCTIONS COULD RESULT IN LOSS OF MACHINE CONTROL, SEROUS PERSONAL INJURY OR DEATH TO YOU AND/OR BYSTANDERS, AND EQUIPMENT AND PROPERTY DAMAGE. OPERATE THE MACHINE ACCORDING TO THE SAFETY INSTRUCTIONS OUTLINED HERE AND INSERTED THROUGHOUT THE TEXT. ANUONE WHO USES THIS MACHINE MUST READ THE INSTRUCTIONS AND BE FAMILIAR WITH THE CONTROLS.**

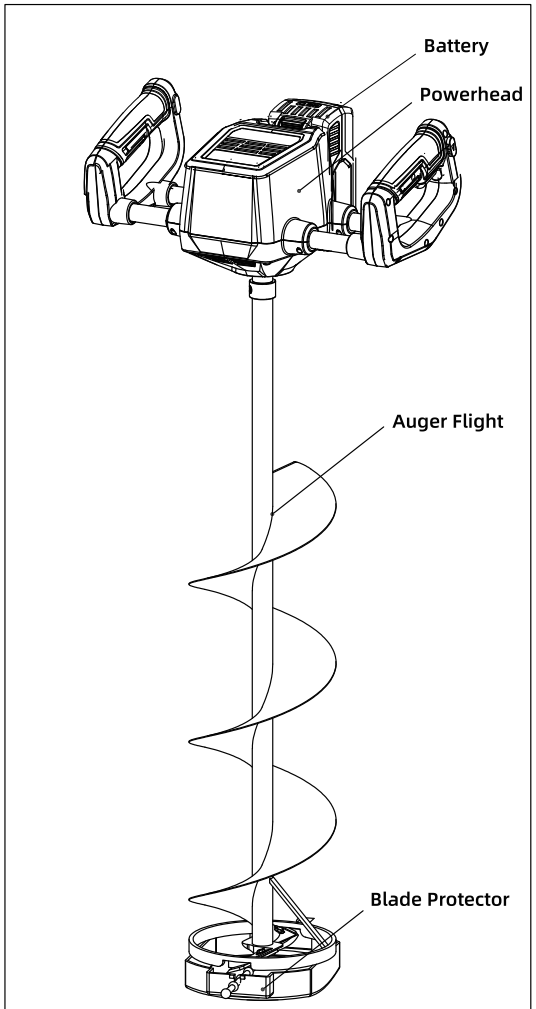


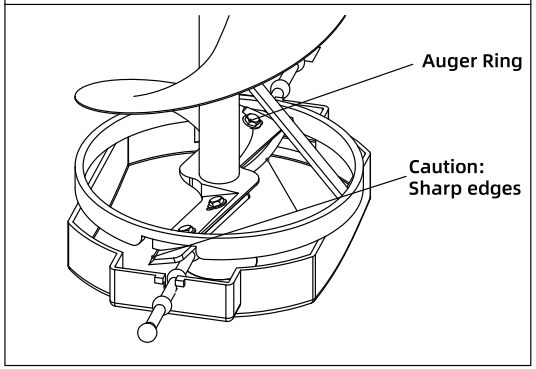

## Important Safety Precautions

- The ice blades are very sharp. Use extreme caution when drilling a hole or replacing the blades. Put the blade guard on after each use.
- Always keep hand, feet, hair, drawstrings, scarves, hats and loose clothing away from any moving parts on the unit.
- Do not allow children to operate this unit. Do not allow adults to operate the unit without proper instructions.
- Do not operate any power equipment under the influence of alcohol or drugs.
- Keep all screws, nuts and bolts tight.
- The battery must be removed before any repairs are attempted.
- If the unit becomes stuck in a hole, remove the battery before attempting to remove the unit manually.
- DO NOT use this product for other than its intended purpose.
- DO NOT use attachments other than those available from original factory.
- DO NOT alter this product in any manner; doing so is dangerous and will void the warranty.
- DO NOT continue to use this product in the event of mechanical failure.
- This product produce considerable torque that is felt by the operator. Make sure your feet are firmly planted and that the handle are held firmly while operating the auger.
- During operation, the unit could stop. If this happens, release the operating trigger. Reposition your feet and grip the handles tightly. Then squeeze operating trigger and life the unit gently.
- When drilling ice holes, do not push down on the unit. If auger begins to drill slowly, blades may need to be sharpened or replaced.
- DO NOT discard the battery into trash can. Discard the battery according to your local, federal or country's regulations.

## ⚠ IMPORTANT

**CHARGERS COME PACKAGED IN THE AUGER CARTON . BATTERY MUST FULLY CHARGED BEFORE FIRST USE.**

### UNPACKING AND ASSEMBLY
### To Assemble the Auger to the Powerhead

1. Remove the hex wrench that is included in the carton.
2. Insert the hex wrench into the bolt at the top of the auger. Remove the bolt by turning counter-clockwise.
3. Insert the driveshaft of the powerhead into the collar of the auger assembly. (Fig.1)
4. Align the hole in the auger shaft with the hole in the powerhead shaft. Tighten firmly, turning clockwise. There may be some wiggle in the connection; this is normal. If the connection is too tight, disassembly may be difficult.



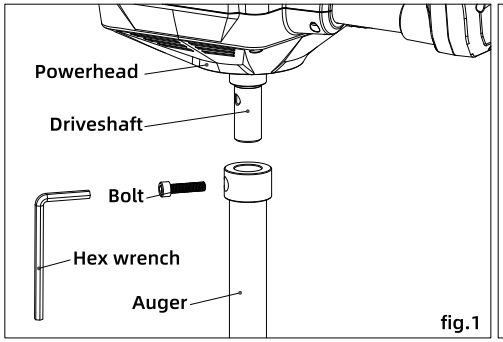

fig.1

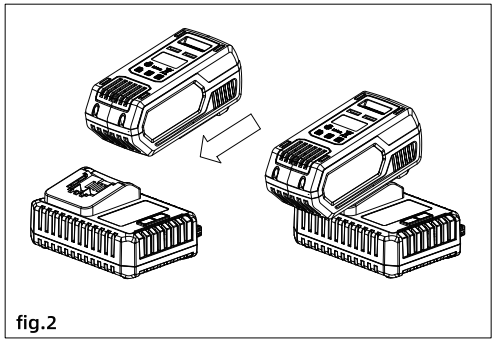
fig.2

### To Charge the Battery for First Use

1. Connect the charger to standard 100-240 volt outlet; a red light should appear on the charger. Always connect charger to standard 100-240 volt wall outlet before inserting battery.**(Fig.2)**
2. Charge the battery until the light on the charger turns solid green.
3. To disconnect the battery, remove the plug from the wall outlet then disconnect the battery from charger.

NOTE: Do not leave the battery on the charger after the charge is complete. Unplug the charger from the wall and remove the battery.

## ⚠ IMPORTANT

**DO NOT LEAVE BATTERY ON POWERHEAD WHEN AUGER IS NOT IN USE. ALWAYS DETATCH BATTERY WHEN NOT USING THE ICE AUGER.**

### To Install the Battery

Slide the battery onto the powerhead until it is fully seated.

## ⚠ IMPORTANT

**BATTERY MUST BE FULLY CHARGED BEFORE FIRST USE.**

### OPERATION
### The auger is powered using the 40-volt 8.0 Ah battery supplied with the unit.

1. Make sure your footing is secure and that you have the unit in the vertical position firmly in your hands.
2. Depress the operating lock lever on your right, then squeeze the operating trigger. **(Fig.3)**
3. To stop the auger, release the operating trigger.
4. Depress the LED Switch on your left, the LED light on the bottom is on. Depress the LED Switch again, then the LED light is off. **(Fig.3)**
5. When the auger is not in use, remove the battery.